SHARP

ND-RB270 | 270 W
ND-RB275 | 275 W

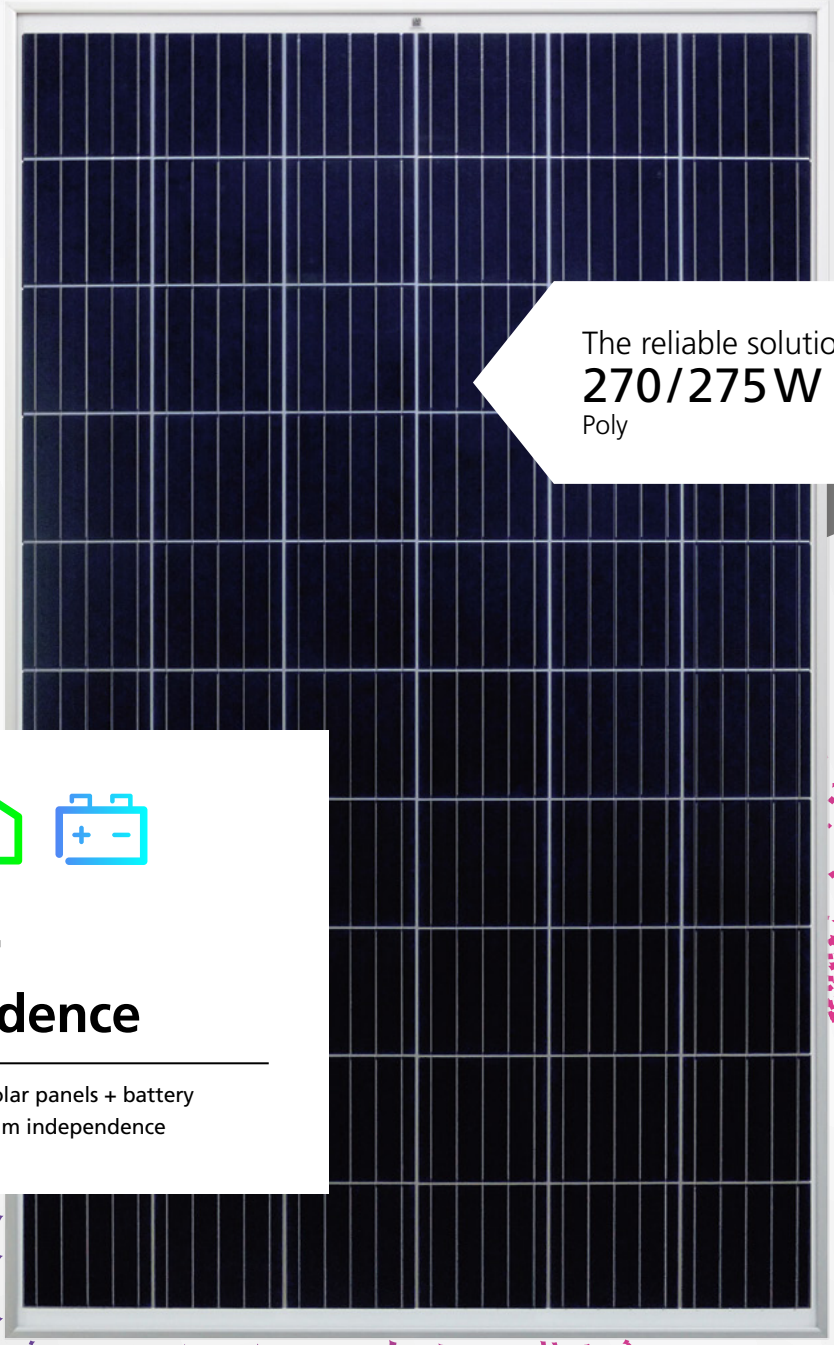

The reliable solution (RB)
270/275 W
Poly

For your independence

Take advantage of solar panels + battery solutions for maximum independence

- 55 years of solar expertise
- Guaranteed positive power tolerance (0/+5 %)
- Top PV brand award

Proven Quality
TÜV, IEC/EN61215, IEC/EN61730
Safety class II / CE
Application class A
DIN EN 13501-1 (class E)

- Polycrystalline silicon photovoltaic modules

- 10 YEARS Product guarantee
- 25 YEARS Linear power output guarantee

Robust product design
Ammonia test passed (IEC62716)
Salt mist test passed (IEC61701)

Electrical data (STC)

		ND-RB275	ND-RB270	
Maximum power	P_{max}	275	270	W_p
Open-circuit voltage	V_{oc}	38.5	38.4	V
Short-circuit current	I_{sc}	9.25	9.18	A
Voltage at point of maximum power	V_{mpp}	31.1	30.9	V
Current at point of maximum power	I_{mpp}	8.84	8.73	A
Module efficiency	I_m	16.8	16.5	%

STC = Standard Test Conditions: irradiance 1,000 W/m², AM 1.5, cell temperature 25 °C.
Rated electrical characteristics are within ±10 % of the indicated values of Isc, Voc and 0 to +5 % of Pmax (power measurement tolerance ±3 %).

Electrical data (NOCT)

		ND-RB275	ND-RB270	
Maximum power	P_{max}	204	200	W_p
Open-circuit voltage	V_{oc}	35.6	35.5	V
Short-circuit current	I_{sc}	7.47	7.41	A
Voltage at point of maximum power	V_{mpp}	29.0	28.7	V
Current at point of maximum power	I_{mpp}	7.03	6.97	A

Electrical values measured under nominal operating conditions of cells : 800 W/m² irradiance, air temperature of 20 °C, wind speed of 1 m/s.
NOCT : 44°C (nominal operating cell temperature)

Mechanical data

Length	1,650 mm
Width	992 mm
Depth	35 mm
Weight	18.6 kg

Temperature coefficient

P_{max}	-0.41 %/°C
V_{oc}	-0.32 %/°C
I_{sc}	0.05 %/°C

Limit values

Maximum system voltage	1,000 V_{DC}
Over-current protection	15 A
Temperature range	-40 to +85° C
Max. mechanical load (snow/wind)	2,400 Pa
Tested snow load (IEC61215 test pass*)	5,400 Pa

Dimensions (mm)

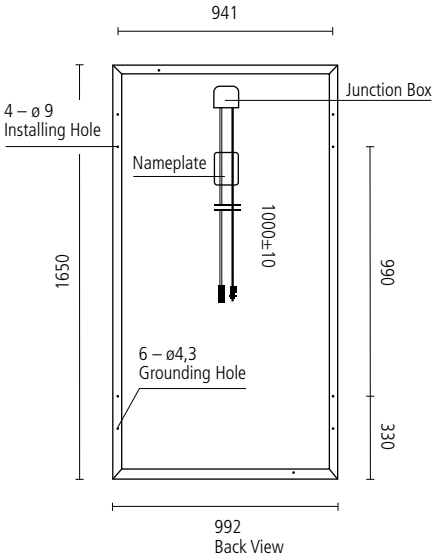

*Please refer to Sharp's installation manual for details.

General data

Cells	polycrystalline Si, 156 mm x 156 mm, 60 cells in series
Front glass	low iron tempered glass, 3.2 mm AR coated
Frame	anodized aluminium alloy, silver
Connection box	PPE+PS resin, IP67 Rating, 3 bypass diodes
Cable	CE cable 4.0 mm, length 1,000 mm
Connector	MC4

Packaging data

Modules per pallet	30 pcs
Pallet size (L × W × H)	1.70 m × 1.1 m × 1.18 m
Pallet weight	600 kg

Empower yourself

www.sharp.eu

SHARP

Contact Sharp
SHARP ELECTRONICS GMBH
ENERGY SOLUTIONS
NAGELSWEG 33 - 35
20097 HAMBURG
GERMANY
T: +49(0)40/2376-2436
F: +49(0)40/2376-2193

Contact Installer

Local responsibility: **Benelux** SolarInfo.seb@sharp.eu, **France** SolarInfo.fr@sharp.eu, **Germany** SolarInfo.de@sharp.eu, **Poland** energy-info.pl@sharp.eu
Spain & Portugal SolarInfo.es@sharp.eu, **United Kingdom** SolarInfo.uk@sharp.eu, **Other countries** SolarInfo.Europe@sharp.eu

Note: Technical data is subject to change without prior notice. Before using Sharp products, please request the latest data sheets from Sharp. Sharp accepts no responsibility for damage to devices which have been equipped with Sharp products on the basis of unverified information. The specifications may deviate slightly and are not guaranteed. Installation and operating instructions are to be found in the corresponding handbooks, or can be downloaded from **www.sharp.eu/solar.** This module should not be directly connected to a load.

NDRB75_02/17EN